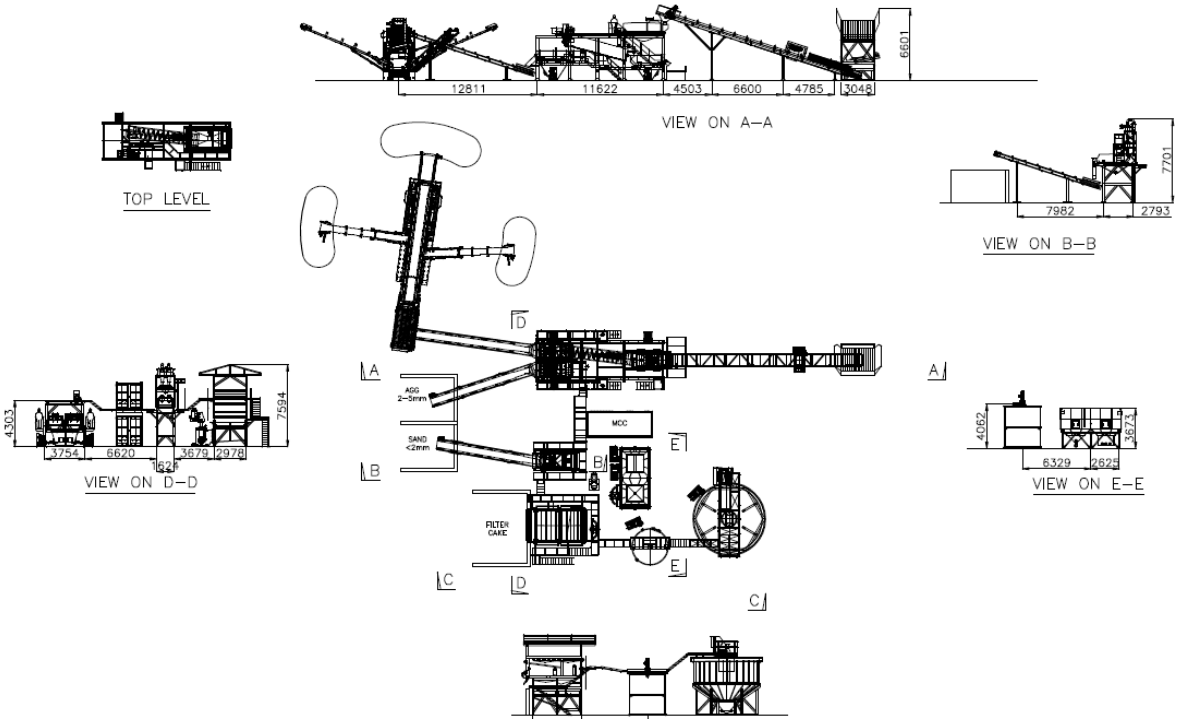APPENDIX 4 – Application 19/2894/FUL
Details of Plant including Picture